Burgess-Aarding

A CECO Environmental Brand

SILENCER TECHNOLOGY & ACOUSTICAL SOLUTIONS

CECO ENVIRONMENTAL

DELIVERING CONFIDENCE IN HIGH PERFORMANCE ACOUSTICAL SOLUTIONS

CONTENT

page 3

page 4 - 11

page 12 - 13

page 14 - 15

page 16

Burgess-Aarding is part of CECO Environmental, a multi-division company focused on the design and manufacturing of component equipment used in environmental and flue gas handling applications.

Burgess-Aarding has supplied a wide variety of silencer products for industrial applications since the early 1920's and was the very first company to offer a commercially produced acoustic reduction component to the market.

Our customers are gas turbine manufacturers (OEM), boiler suppliers, power producers, EPC contractors or end users. Whether a problem can be solved from our standard products line or needs a tailor made solution, Burgess-Aarding takes control from design to installation. Even for complex turn-key retrofit projects.

We have an expert staff of engineers and highly skilled welder assemblers in numerous locations in Americas, Europe and Asia.

Today, with approx. 50,000 acoustical solutions designed and installed at facilities worldwide, factories on every major continent and with more acoustical experts on staff then any other competitor, we are recognized in the industry as the #1 silencer company in the world. With this experience along with our continued research and product development efforts, we offer the widest selection of acoustical solutions to meet any noise problem that you may encounter.

CAPABILITIES

1. Exhaust Diffuser / Exhaust Plenum
2. Exhaust Duct
3. Exhaust Bypass System
4. Silencer
5. Exhaust / HRSG Inlet Duct
6. HRSG Internal Insulation
7. Vent Silencer
8. Stack
9. Expansion Joint
10. Diverter Damper
11. Guillotine Damper
12. CO / VOC Oxidation
13. Selective Catalytic Reduction (SCR) / DeNOx
14. Peerless Patented EDGE™ AIG
15. Reagent Control System
16. Dump Tube
17. Inline Diffuser
18. Commissioning Silencer

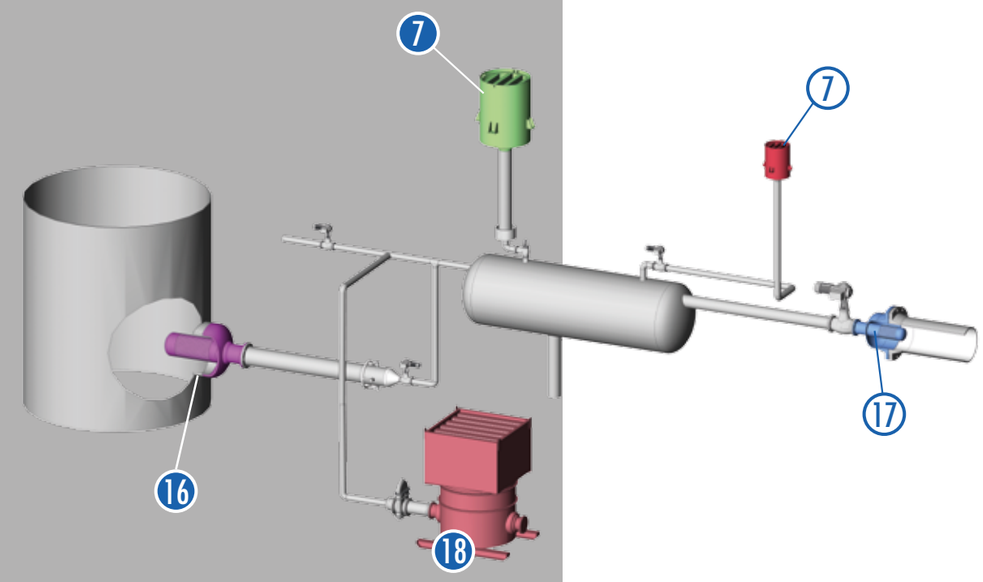

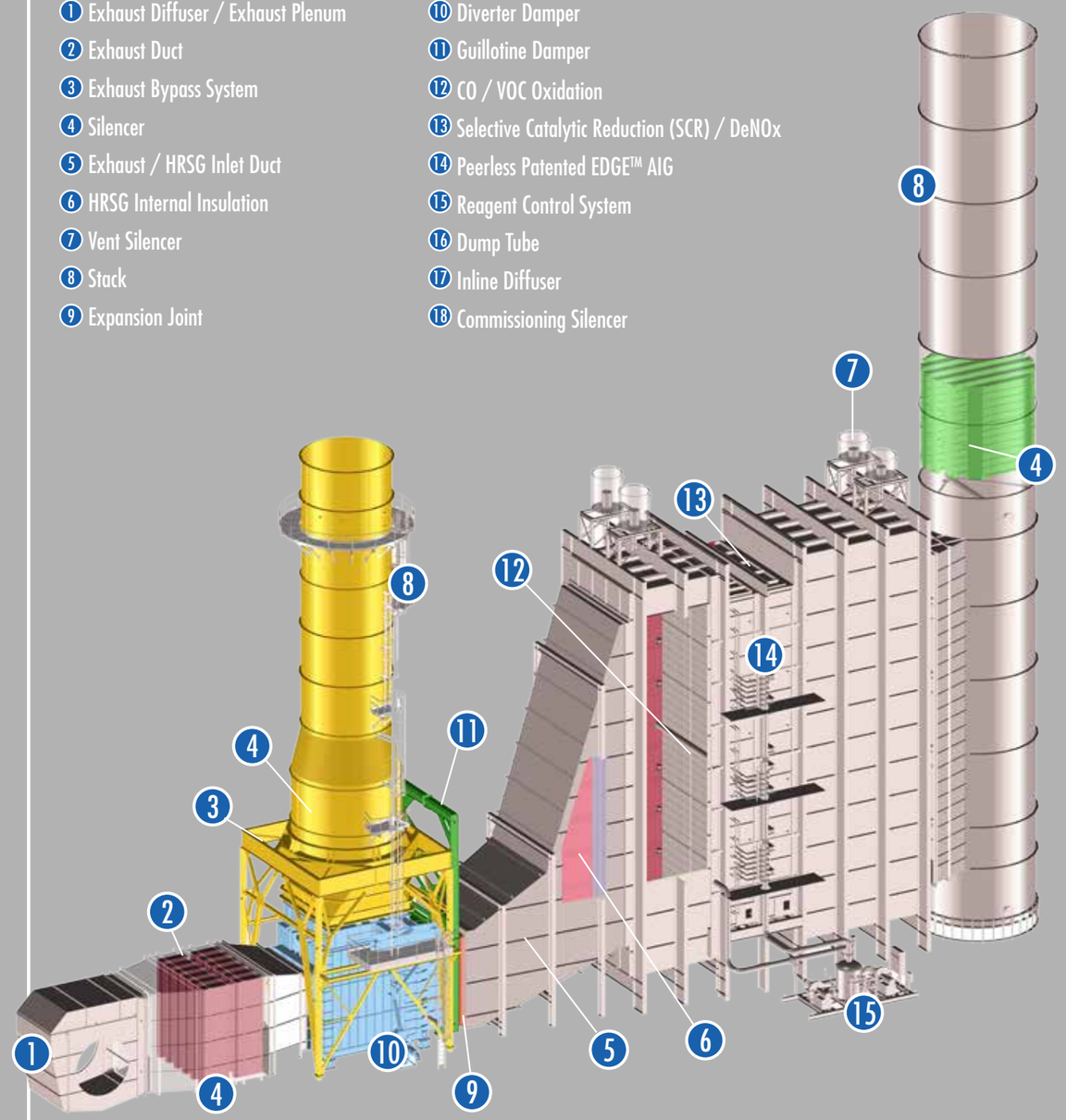

The current market environment is pushing the operational conditions of Industrial Gas Turbine systems to its limits. High cycling (high numbers of starts and stops) as well as high local flue gas velocities and temperatures are putting large stresses on the exhaust gas systems. Environmental regulations require stringent and lower noise levels on gas & steam turbine driven systems as well as on petrochemical applications.

ACOUSTICAL SOLUTIONS BURGESS-AARDING SILENCER TECHNOLOGY GROUP

- Commissioning Silencers
- Inline Diffusers and Spargers
- Reactive Silencers
- Absorptive Silencers
- Vacuum Pump Separator / Silencers
- Flue Gas Silencers
- Vent / Blowdown Silencers
- Engine Silencers
- Compressor Silencers
- Blower Silencers
- Acoustical Shrouds
- Filter Silencers
- Filter Elements

INNOVATIVE SILENCER SOLUTIONS

OUR ATMOSPHERIC VENT SILENCERS VENT VIRTUALLY ANY GAS.

Burgess-Aarding vent silencers are typically used in conjunction with a relief/safety or start up type valve. Applications are in heat recovery systems, steam boilers, and at oil/gas/chemical processing plants. The Burgess-Aarding vent silencer effectively eliminates unwanted noise at the source and provides for low sound level discharge to the atmosphere.

Burgess-Aarding vent silencers are custom sized and designed for each and every application ensuring the best acoustical performance and can be designed for as low as 500 kg/hr (1,100 lbs/hr) to upwards and exceeding half a million kg/hr (1.1 million lbs/hr).

Applications: Safety and relief valves, gas vents, process gas blowdowns, boiler start up and purge, switch valves, drain and atmospheric blowdown tanks.

Our silencers can be designed to vent virtually any gas for example:

+ Steam
+ Natural Gas
+ Nitrogen
+ Air
+ Hydrogen mixed gases
+ Oxygen
+ etc

Commissioning Silencers

Burgess-Aarding commissioning silencers are designed for temporary usage to vent down high velocity steam or air and to collect and remove possible debris (tools, weld slag, etc.,) present during new pipeline construction that could cause damage to downstream equipment once the pipeline is commissioned and the equipement (turbine, fans, compressors, etc.,) is installed. Our standard model is designed to vent over half a million kg/hr (1.1 million lbs/hr) of steam and provides 35-40 decibels of noise reduction. Additional noise reduction in total noise is achievable by way of an acoustical splitter package installed at the outlet of the silencer. This design with splitter package can provide for over 50 decibles of noise reduction. The silencer is skidded for shipment and installation on a flat ground.

In-line Diffusers / Spargers

The Burgess Aarding in-line diffuser/sparger assembly is a drilled pipe component and is designed to reduce the noise typically associated with pressure reducing valve applications. These designs are especially effective when used in combination with a valve to achieve and/or share the total pressure drop required by the system. It also is effective in dissipating high energy noise and reshaping the frequency spectrum, shifting the peak frequency to a higher octave band therefore reducing the total emitted noise.

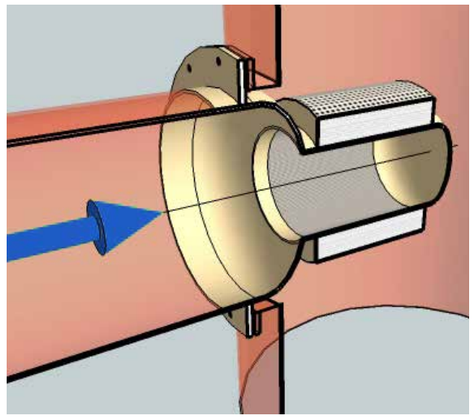

REACTIVE SILENCERS

Applications

Low to medium frequency noise reduction for:

+ Intake and exhaust of reciprocating engines
+ Discharge of rotary blowers and vacuum pumps
+ Exhaust for reciprocating engines in marine use

Design

Gas flows through an arrangement of ported tubes and chambers which attenuates the noise over a wide frequency.

Model BEO – Engine Exhaust Silencer

ABSORPTIVE SILENCERS

Applications

Medium to high frequency noise reduction at low pressure drop for:

+ Suction and discharge for centrifigal compressors and blowers
+ Intakes and exhaust for gas turbines
+ Upstream and downstream of pressure reduction valves

Design

Gas flows through an annular passage lined with perforated tubes backed by multiple layers of sound absorbing materials.

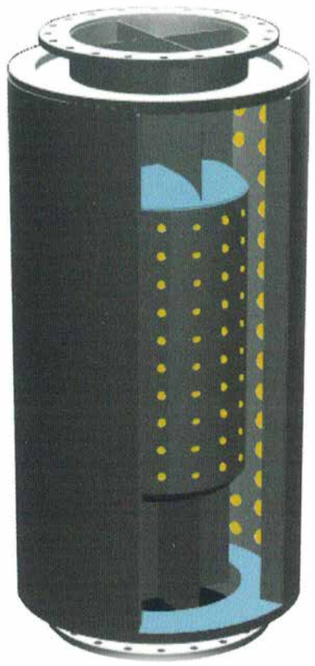

ACA Silecner

WATER SEPARATOR / SILENCERS

Applications

+ Separator / Silencers for water sealed-vacuum blowers
+ 99% of the free liquids are removed centrifugally in the separation section.

Design

The Burgess-Aarding design removes liquids and prevents noise. Gas flow passes through a separation section, a ported tube and snubbing chamber which attenuates the noise over a wide frequency range.

WSDA- Water Separator Silencer

FLUE GAS SILENCERS

Applications

Medium to high frequency noise reduction at low pressure drop for:

+ Hot or cold exhaust stacks, single cycle or bypass (from 1,5m (60 inches) up to 10m (390 inches) diameter)
+ Ducts (Square or round)

Design

Gas flows through a Patented rectangular splitter section lined with perforated metal and backed by multiple layers of sound absorbing materials.

ACOUSTICAL SHROUDS

With increasing noise restriction requirements and the installation of large power plants close to cities and neighborhoods, acoustical panels provide an effective and economical acoustical treatment for large surface areas. These panels and lagging are particularly well suited for large surface areas like HRSG's and their inlet ducts.

Our "sandwich" design of panel is 50 to 150mm (2 to 6 inches) thick (depending on acoustical requirements) and consists of a steel galvanized in- and outside skin, acoustical filler and a perforated steel. The acoustical panels are supplied cut to size and marked, and installed with an easy interlock system with all adjacent panels. The panels are approx. 1,2m x 6m (4ft x 20ft) and will be horizontal mounted. Due to the complexity of these large projects we support you with 1-2 days in office support by our best engineers, to make sure our product meets your system requirements. Support includes engineering design review meetings and CAD-modeling of our shroud to the customers structure if required.

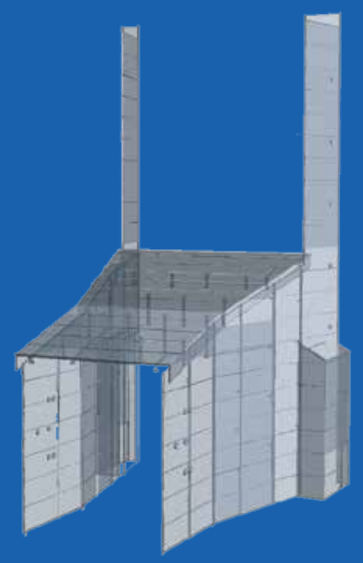

BLOWDOWN SEPERATOR SILENCER

The Burgess-Aarding Blowdown Silencer / Separators are installed at Natural Gas Compressor Stations, storage facilities, and Midstream Processing Plants to provide a means of reducing the noise generated by the rapid venting of compressed gas to atmosphere either during a scheduled maintenance blowdown or an emergency blowdown scenario while also removing suspended liquids from the gas stream prior to being expelled to the atmosphere.

Burgess-Aarding engineers can properly size and incorporate a restriction orifice to be installed upstream of the silencer to control the blowdown time period and/or control the rate of initial blowdown if required to protect the compressor unit from damage caused by a rapid decompression.

Available options with the Burgess-Aarding Blowdown Silencer / Separators include the restriction orifice, a double domed weatherhood to minimize the potential from rain collecting in the silencer while also allowing for the gas to escape unencumbered to atmosphere, a liquid collection sump with liquid level gauge and/or liquid level switch, and a drain valve to drain the collected liquids.

The silencer / separator can be sized to a specified height and/or exit diameter to optimize the exit velocity to ensure a safe dispersion of the gas into the atmosphere.

FILTER SILENCER, SERIES A AND B AIR INTAKE CLEANING FOR ENGINES, COMPRESSORS, BLOWERS AND TURBINES

Applications

Burgess-Aarding standard Filter/Silencers (BMF) are designed for use on the air intakes compressors, blowers, engines and gas turbines.

Description

Burgess-Aarding standard models in the A and B Series offers sizes ranging from 2.500 to 81.500m³/hr (1,500 to 48,000 CFM) with either single or dual stage filtration. Efficiencies range from 72% to 99% AC fine.

The assemblies can reduce intake noise from the source by up to 14 decibles and if additional acoustic reduction is required, other Burgess-Aarding filter silencer elements can be added to the installation.

The Series A housing is designed to accept a conventional 50mm (2 inches) deep single filter element or for critical services, two 50mm (2 inches) deep filter elements in series.

The B Series B housing is designed to accept a 300mm (12 inches) deep, high efficiency single filter element. An additional 50mm (2 inches) deep pre-filter element can be used in series if required.

When it is time to change out a filter element, unique spring loading catches simplify the removal and replacement of these elements with the most common filter elements stocked by Burgess-Aarding for quick assembly and shipment directly to the jobsite.

1. Lifting lug
2. Removable weatherhood
3. Weatherhood locking catch
4. Filter base
5. Drain NPT tap
6. Single-stage, primary filter
7. Galvanized steel filter frame
8. Positive, spring-loaded locking catches
9. Dual-stage, pre-filter & final filter

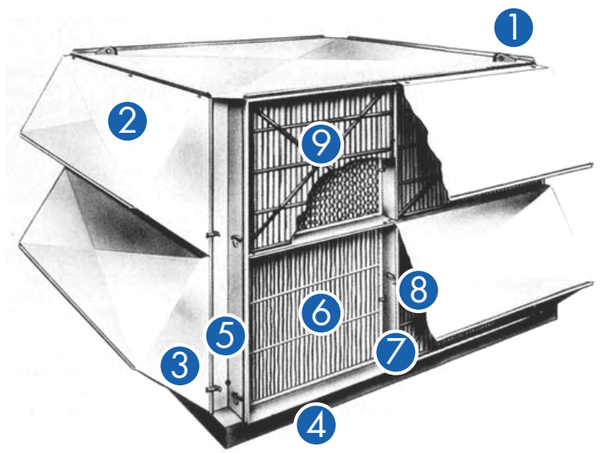

MARKETS

Burgess-Aarding provides products and services to the following markets:

+ Power Energy Market
+ Petro Chemical Market
+ Aero Engine Market
+ Gas Transmission Market

POWER ENERGY MARKET

Within the Power Energy Market, the Burgess-Aarding products can be placed within:

+ Coal Fired Power Plants
+ Gas and Oil Fired Power Plants

Burgess-Aarding supplies worldwide the products to end-users, EPC's, turbine suppliers, boiler suppliers and engineering-contracting companies for eventual balance of plants solutions.

PETRO CHEMICAL MARKET

Where over pressure of several gasses is applicable, the Burgess-Aarding products can be delivered.

AERO ENGINE MARKET

Burgess-Aarding provides new as well as retrofit silencer and exhaust systems for Aero Engine test cells and hush houses.

GAS TRANSMISSION MARKET

Blowdown separator silencers for the natural gas transmission market ensure the safe discharge of hazardous gases in both emergency and routine scenarios.

QUALITY

At Burgess-Aarding our skilled team of engineers and skilled fabrications workers ensure the best quality of our products.

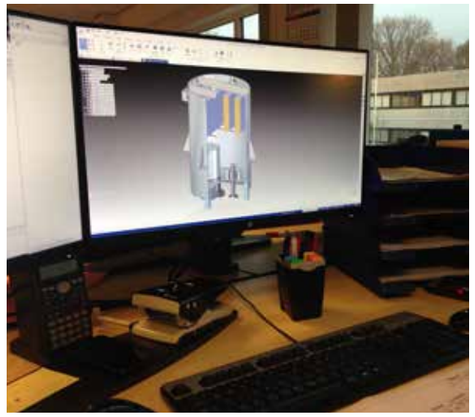

BURGESS-AARDING PROJECTS

"Our strength comes from our extensive know-how on a wide variety of acoustical products."

NORTH AMERICA

+ Wayne County, North Carolina
  Supply Of Vent Silencers
+ Lackawana, Jessup Pennsylvania
  Supply Of Vent Silencers, Flue Gas Silencers
+ Okeechobee, Florida
  Supply Of Vent Silencers, Flue Gas Silencers
+ Fort Myers, Florida
  Supply Of Inline Diffusers, Vent Silencers
+ Greenfield, Ottawa Canada
  Supply Of Vent Silencers
+ Temple & Sherman, Texas
  Supply Of Vent Silencers
+ Richmond Energy Centre, Philadelphia
  Supply Of Vent Silencers
+ Oxymar, Gregory Texas
  Supply Of Natural Gas Blow Down Silencers
+ Nicor Gas, Streator Illinois
  Supply Of Natural Gas Blow Down Silencers
+ Colerain Compressor Station, Dillonvale Ohio
  Supply Of Natural Gas Blow Down Silencers
+ Salineville - Tx Eastern Transmission, Ohio
  Supply Of Natural Gas Blow Down Silencers
+ Algonquin Gas Transmission, Weymouth Massachusetts
  Supply Of Natural Gas Blow Down Silencers
+ Texas Eastern Transmission Lp, Summer Shade Kentucky
  Supply Of Natural Gas Blow Down Silencers
+ Bedford/Tx Eastern Transmission, Bedford Pennsylvania
  Supply Of Natural Gas Blow Down Silencers
+ Cpg Grayson Metering Station, Grayson Kentucky
  Supply Of Natural Gas Blow Down Silencers
+ Carrol County, Ohio
  Supply Of Spargers
+ Moxie Energy, Lucerne County Philadelphia
  Supply Of Spargers

LATIN & SOUTH AMERICA

+ Belgrano & San Martin, Argentina
  Supply Of Vent Silencers
+ Pilar, Buenos Aires Argentina
  Supply Of Vent Silencers, Flue Gas Silencers
+ Parnaiba, Brazil
  Supply Of Vent Silencers
+ Termoflorres, Bogota Colombia
  Supply Of Vent Silencers
+ Manzanillo, Mexio
  Supply Of Vent Silencers, Flue Gas Silencers
+ Tuxpan, Mexico
  Supply Of Vent Silencers
+ Empalme I & Ii, Empalme Mexico
  Supply Of Vent Silencers
+ Termozilia, Venezuela
  Supply Of Vent Silencers, Flue Gas Silencers
+ Altamira, Mexico
  Supply Of Vent Silencers
+ Red Dragon, Antofagasta Chili
  Supply Of Vent Silencers
+ Shell Offshore, Mexico
  Supply Of Inline Diffusers

EUROPE

+ Schiphol Airport, The Netherlands
  Supply Of Aircraft Engine Test Cell
+ Te-to Zagreb, Croatia
  Supply Of Flue Gas Silencers
+ Mittelbrunn, Germany
  Supply Of Vent Silencers
+ Stolberg, Germany
  Supply Of Vent Silencers
+ Mongstad, Norway
  Supply Of Vent Silencers
+ Zabzip, Tobolsk, Russia
  Supply Of Vent Silencers
+ Tuapse, Russia
  Supply Of Flue Gas Silencers
+ Derby, Uk
  Supply Of Vent Silencers
+ Volta, Istanbul Turkey
  Supply Of Vent Silencers, Flue Gas Silencers
+ Megalopolis, Greece
  Supply Of Vent Silencers
+ Öresundsverket, Sweden
  Supply Of Flue Gas Silencers

AFRICA

+ Ain Beni Mathar, Marocco
  Supply Of Vent Silencers
+ Arzew, Algeria
  Supply Of Flue Gas Silencers
+ Kureimat, Egypt
  Supply Of Flue Gas Silencers
+ Cairo North, Egypt
  Supply Of Vent Silencers
+ Takoradi, Ghana
  Supply Of Flue Gas Silencers
+ Talkha, Egypt
  Supply Of Flue Gas Silencers

MIDDLE EAST & INDIA

+ PP13/PP14, Riyadh Saudi Arabia
  Supply Of Vent Silencers, Flue Gas Silencers
+ Hail, Saudi Arabia
  Supply Of Vent Silencers, Flue Gas Silencers
+ PP12, Riyadh Saudi Arabia
  Supply Of Vent Silencers
+ Fujairah, United Arab Emirates
  Supply Of Vent Silencers
+ Rabigh 6, Saudi Arabia
  Supply Of Vent Silencers
+ Shuqaiq, Jazan Saudi Arabia
  Supply Of Vent Silencers
+ Sohar, Oman
  Supply Of Vent Silencers
+ Mundra, India
  Supply Of Vent Silencers
+ Umm Lulu, Abu Dhabi United Arab Emirates
  Supply Of Flue Gas Silencers
+ Sipat, India
  Supply Of Vent Silencers
+ Raipur, India
  Supply Of Vent Silencers
+ Jazan, Saudi Arabia
  Supply Of Vent Silencers
+ Samalkot, India
  Supply Of Vent Silencers
+ Yanbu, Saudi Arabia
  Supply Of Vent Silencers

ASIA

+ Gulf A + B, Thailand
  Supply Of Vent Silencers
+ Vinh Tan, Vietnam
  Supply Of Vent Silencers
+ Mongduong 1 & 2, Vietnam
  Supply Of Vent Silencers
+ Seng Kang, Indoneie
  Supply Of Vent Silencers
+ Karabatan, Kazakhstan
  Supply Of Vent Silencers
+ Navoi, Uzbekistan
  Supply Of Vent Silencers
+ Jimah East, Jimah Power Plant Malaysia
  Supply Of Vent Silencers
+ Amata Bang Pakong, Thailand
  Supply Of Vent Silencers
+ Jeju, South Korea
  Supply Of Commissioning Silencers & Vent Silencers
+ Keppel, Singapore
  Supply Of Vent Silencers
+ Bang Pa, Bangkok Thailand
  Supply Of Vent Silencers
+ Tanjung Bin, Malaysia
  Supply Of Vent Silencers
+ Mae Moh, Vietnam
  Supply Of Vent Silencer
+ Rapid, Kuala Lumpur Malaysia
  Supply Of Vent Silencer

AUSTRALIA & NEW ZEALAND

+ Pinjarra I & Ii, Australia
  Supply Of Flue Gas Silencers
+ Rio Tinto, Australia
  Supply Of Spargers
+ Yarwun, Australia
  Supply Of Vent Silencers
+ Huntly, New Zealand
  Supply Of Flue Gas Silencers

OFFICES

HEADQUARTERS THE NETHERLANDS

Industrieweg 59-71
P.O. Box 65
8070 AB Nunspeet
The Netherlands

Phone +31 341 252635
E-mail info@cecoenviro.com

OFFICE SOUTH AMERICA

Rua Henri Dunant, 1301
sala 5,
Chacara Santo Antonio
Sao Paulo / sp
Brasil

E-mail info@cecoenviro.com

OFFICE ASIA PACIFIC

No. 34 Boon Leat Terrace, #04-19
Singapore, 119866

Phone +65 6472 0020
E-mail info@cecoenviro.com

OFFICE INDIA

701A, ION 7, 7th floor
Morwadi Pimpri
Pune – 411018
Maharashtra, India

Phone +91 965 7060 123
E-mail info@cecoenviro.com

OFFICE USA

50 Cobham Drive
Orchard Park, NY 14127
USA

Phone +1 716 662 6540
E-mail info@cecoenviro.com

OFFICE DUBAI

AU Gold Tower, Floor 28, Office A Cluster I
Jumeirah Lake Towers
PO Box 62435
Dubai, UAE

Phone +971 4434 0004
E-mail info@cecoenviro.com

WWW.CECOENVIRO.COM/BURGESS-AARDING
WWW.BURGESS-AARDING.COM